DOLPHIN
BLUE

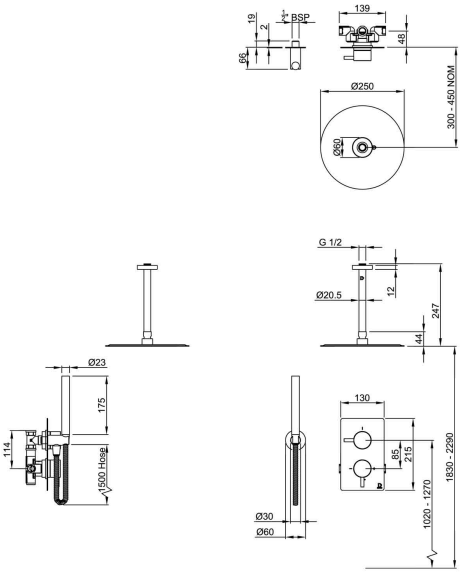

DB3901

SHOWER SET WITH CEILING MOUNTED HEAD AND HANHELD

› 2 Flow regulators: 6 or 9 litres p/m at 6 bar - 5 litres per minute also available on special request
› Special finishes: Ceramic in all colours, PPC (in matt black RAL 9005 15% sheen), polished or satin Stainless Steel
› TMV2 mixing valve
› WRAS compliant
› Suitable for all water systems
› 5 year warranty
› Durable solid stainless steel construction, ideal for commercial End Of Trip areas
› Suitable for all water systems
› Flow rate determined by shower head(s) not by valve
› Components
› DB3100 – Dolphin Shower Control valve - WRAS No. 1911347
› DB3001 – Dolphin Arm Mounted Round Shower Head - WRAS No. 2003342
› DB3060.200 – Dolphin Ceiling Mounted Shower Arm 200mm
› DB3041.150 - Dolphin Flexible Hose 1500mm
› DB3020 - Dolphin Hand Held Shower Head
› DB3073 - Dolphin Wall Outlet with hand held shower bracket

PRODUCT CODES

DB3901.1 - satin stainless steel finish
DB3901.2 - mirror polish finish
DB3901.5.01 - matt black finish

WRAS APPROVED PRODUCT