DOLPHIN
ELEMENTS

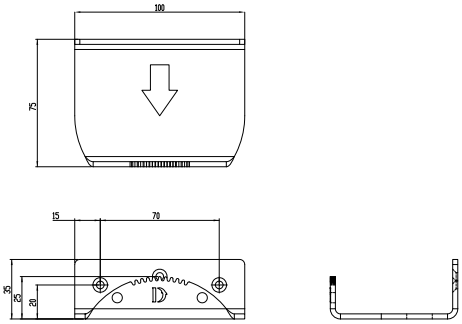

BC295

DOLPHIN DOOR FOOT HANDLE

- Hands Free way of opening doors to stop cross contamination
- Simply place foot on handle and pull back
- Stainless steel construction
- Rubber buffers to protect walls
- Brushed Satin and powder coated finishes available
- Comes with 3x No.8x1" Csk woodscrews and M4 through door connecting screws 35mm – 60mm (ensure suitable screws are used for door type)
- Not suitable for use on hollow core doors (cardboard core material, mdf doors, plywood or hard board doors)

WIDTH	**100 MM**
HEIGHT	**35 MM**
PROJECTION	**75 MM**