DOLPHIN
ELEMENTS

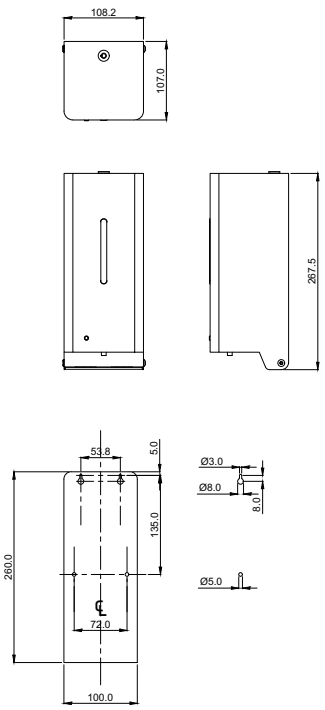

BC950F

DOLPHIN TOUCH FREE FOAM SOAP DISPENSER

SPECIFICATION

- Wall mounted automatic foam soap dispenser with vertically brushed satin stainless steel finish cover with low soap viewing slot and plastic backplate.
- 0.9mm satin finish stainless steel grade 1.4301 (304)
- Powered by 4 x AA (1.5v) Alkaline batteries (not included)
- Fitted with low battery indicator.
- 800ml capacity.
- Delivery per activation: 0.6ml - 0.8ml
- Fitted with anti-tamper key lock

WIDTH	**108 MM**
HEIGHT	**268 MM**
PROJECTION	**107 MM**

INSTALLATION (TILE OR DRY WALL)

› Tape the installation template at the desired location on the mounting surface. 200mm minimum distance above counter top. Do not mount above a reflective surface, or where light is aimed from below at the sensor. This may cause continual activation of the sensor

› Drill 4 holes Ø8 at marked locations

› Remove the template and insert 4 wall plugs into the holes (fig.1)

› Insert 2 screws (use suitable screws for the installation) into the top wall plugs, leaving 3mm gap between the wall and screw head, for hanging dispenser (fig.2 & fig.3)

› Hang the dispenser on the 2 screws, through the keyhole slots on the backplate

› Use the key (supplied) to unlock and pull forward the housing cover (fig.4)

› Remove the soap tank and lock the dispenser to the wall with remaining 2 screws through the holes at the bottom of the backplate

› Tighten all screws (fig.5)

› Adhesive pads also provided – ensure unit properly fixed before filling with soap

OPERATION

› Open housing with key supplied

› Open battery compartment cover, remove battery box and unplug cable; install 4 new Alkaline Type AA 1.5V batteries ensuring that they are installed correctly (Observe the +/- indications)

› Refit the cable to the battery box and reinstall in the battery compartment, then close the cover

› Remove tank cover and fill soap tank with liquid foaming soap only, not pearlised lotion soap.

› Refit tank cover ensuring that the air vent hole is open and nozzle is not clogged.

› Ensure soap tank is clean with no over spill.

› Make sure that the nozzle flange is below the housing cradle rib to stretch the valve tube.

› Push the spout nozzle back into the cradle gate

› Close the housing cover and lock it with the key supplied

› The LED will be lit and flash 4 times. This indicates that the environment has been detected.

› The default sensing distance is 80-100mm, if there is no object under the dispenser.

› The sensor will detect the installation height and environment light and automatically set a suitable sensing distance, if there is an object (such as a basin or counter) under the dispenser.

› To check that the soap dispenser is functioning correctly, place hand under the soap dispenser.

Low Battery Indication

› With housing open and soap tank removed (see instructions) perform the following diagnostic test:

› Press up and hold the cover safety interlock switch on the underside of the dispenser

› The blue LED should be lit and then flash 4 times indicating proper operation "stand-by" condition and battery level is ok.

› If the blue LED continues to flash, replace the batteries.

› Estimated battery life 25,000 activations

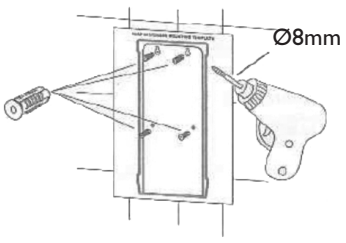

Fig. 1

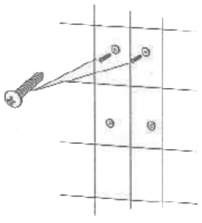

Fig. 2

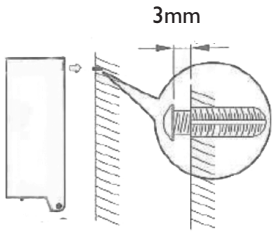

Fig. 3

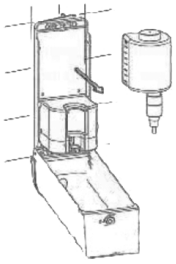

Fig. 4

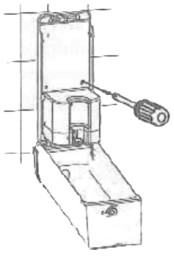

Fig. 5